Intelligent Weapon Control System Diagram

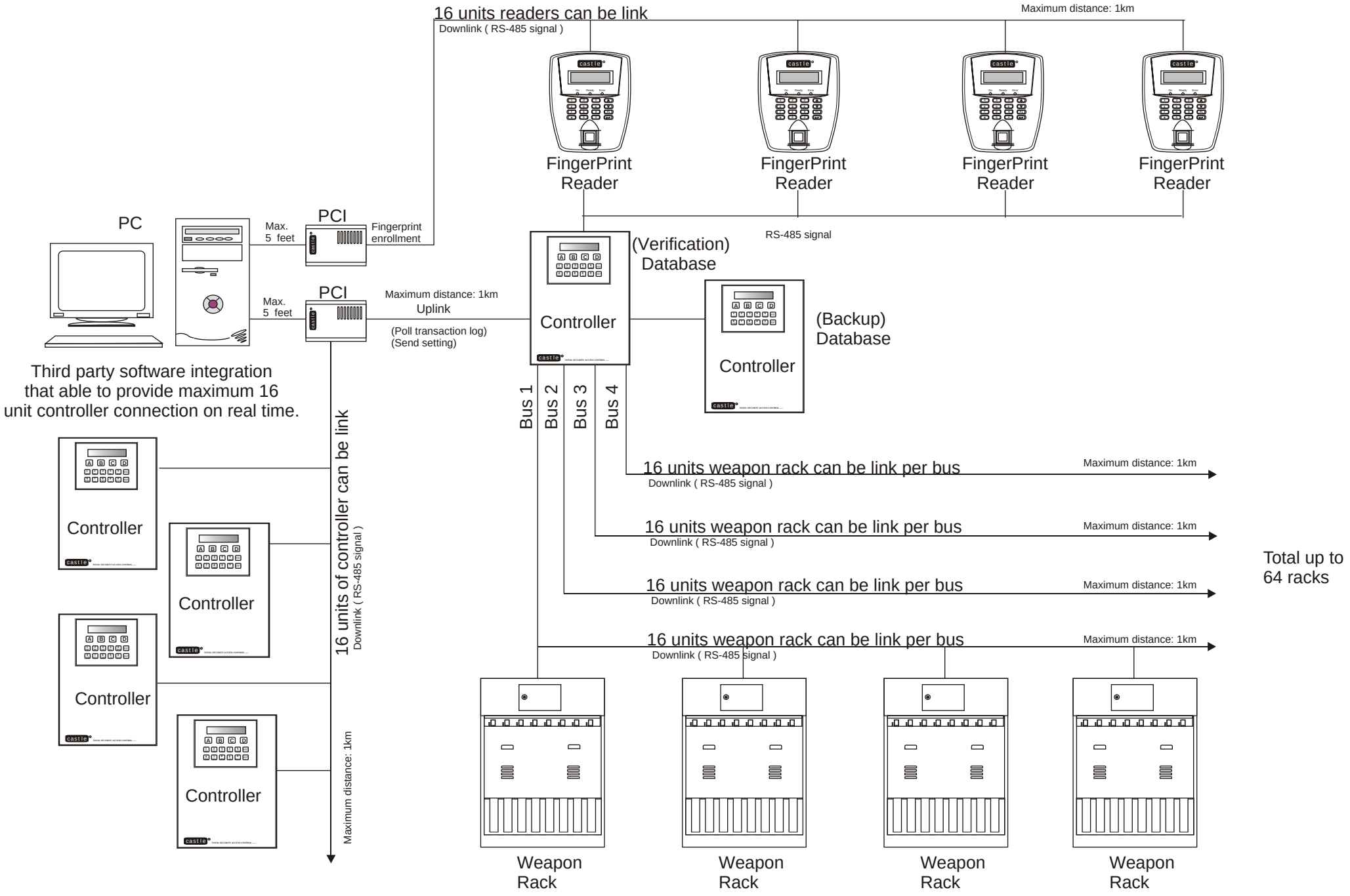

*All specification subject to change without prior notice.

Intelligent Weapon Control System Configuration

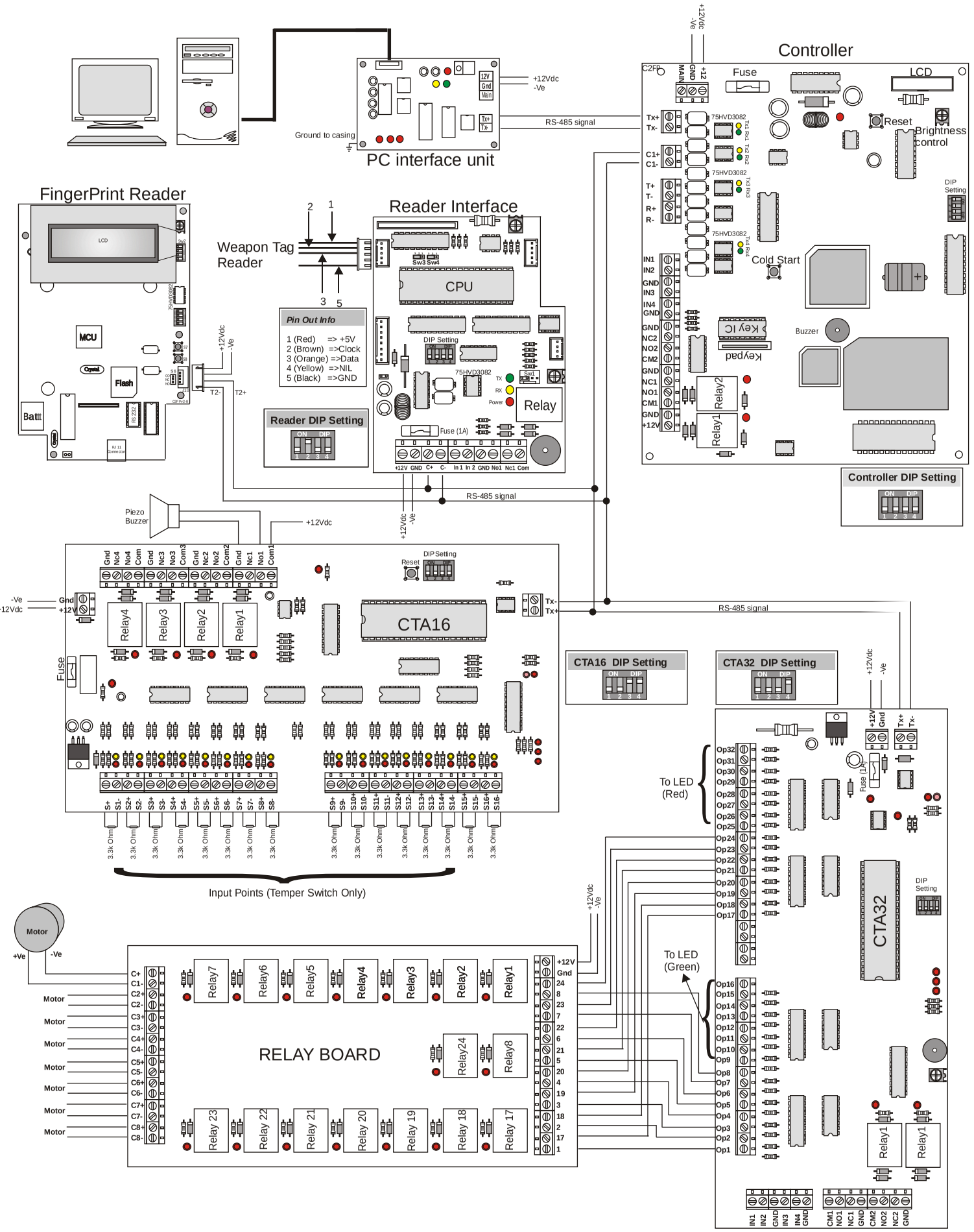

Remarks:

- All communication cable must be compliance RS485 standard, with proper grounding & connected in multidrop connection.

File	IWCS CONFIG v1
Date	200510
Company	*Cass Technology Sdn Bhd*

*All specification subject to change without prior notice.